OW-1 OIL SAND SEPARATOR

Quality Concrete Products, Inc., 4200 78th St. SW, Mukilteo, WA 98275, Ph: (425) 355-5510, Fax: (425) 355-5559

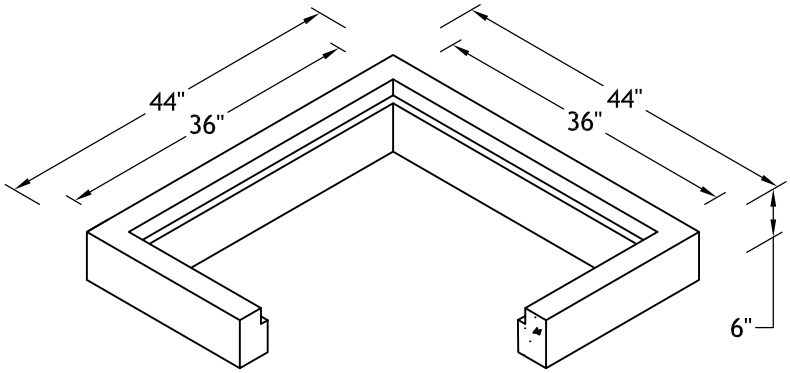

36x36 BASIN (OIL SAND SEPARATOR)

REINFORCING IS 0.12 SQ. INCH/LINEAR FOOT.

TWO 7" KNOCKOUTS PROVIDED.

WEIGHT IS 2940 LBS.

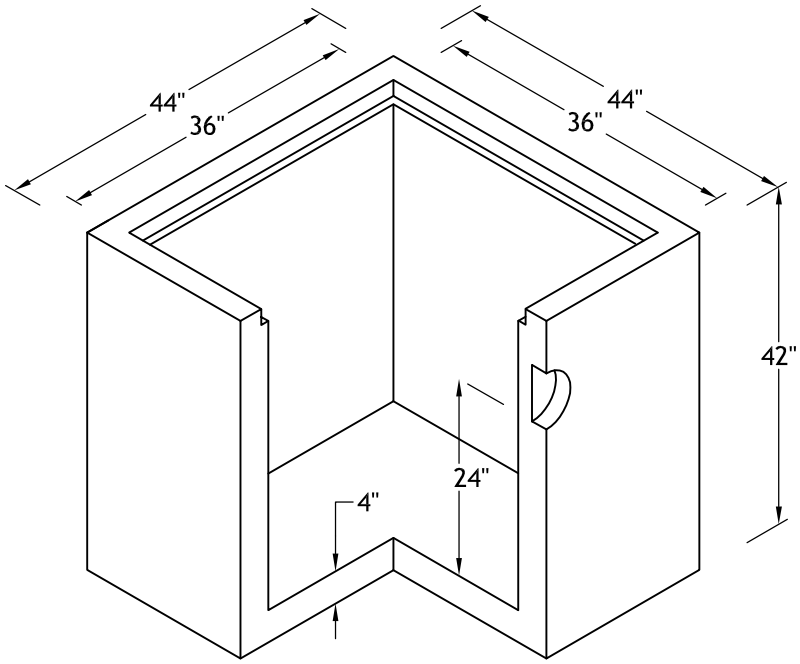

6" RISER

REINFORCING IS 0.12 SQ. INCH/LINEAR FOOT.

WEIGHT IS 340 LBS.

ALL COMPONENTS CONFORM TO WASHINGTON STATE APWA/WSDOT STANDARD SPECIFICATIONS.

OW-1 OIL SAND SEPARATOR

Quality Concrete Products, Inc., 4200 78th St. SW, Mukilteo, WA 98275, Ph: (425) 355-5510, Fax: (425) 355-5559

- **39.5" x 37.5" welded galvanized grate for 36x36 Oil Sand Seperator.**
- **Grate is rated for H20 loading.**

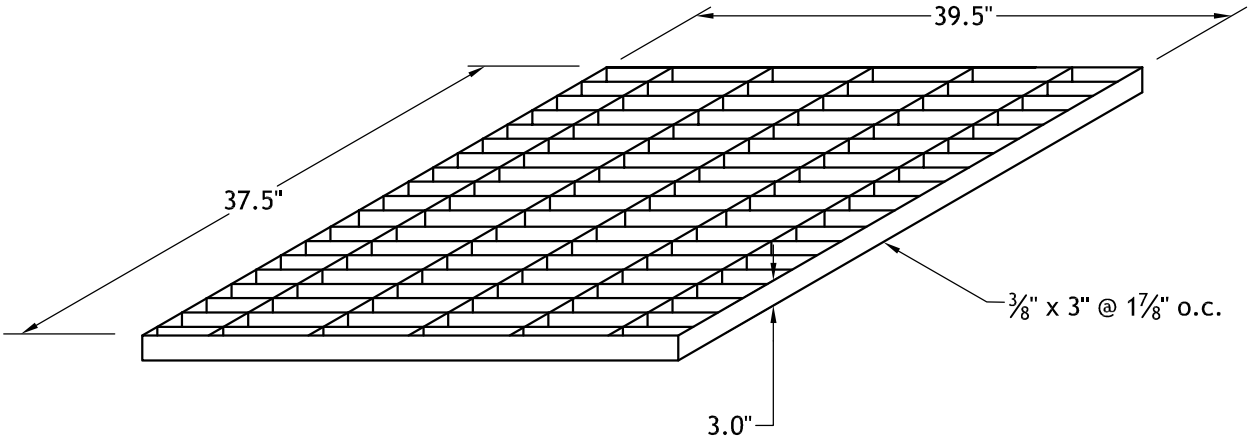

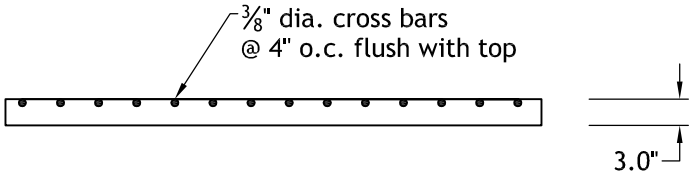

OW-1 OIL SAND SEPARATOR

KOR-N-SEAL® I & II

FLEXIBLE PIPE-TO-MANHOLE CONNECTORS

SPECIFICATION SHEET

KOR-N-SEAL I - WEDGE KORBAND CONNECTOR ASSEMBLY

Install Kor-N-Seal I - Wedge Korband with Socket Wrench & Torque Limiter

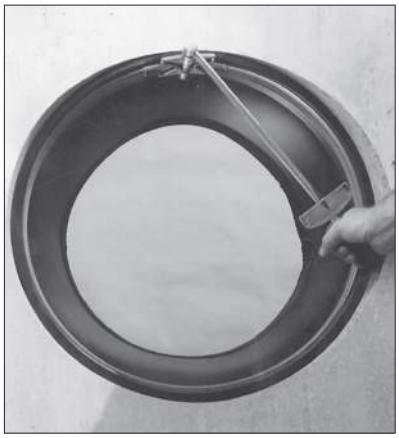

Install Kor-N-Seal II - Wedge Korband with Standard Torque Wrench

Install Pipe Clamp(s) with T-Handle Torque Wrench

www.npc.com
250 Elm Street • P.O. Box 301
Milford, NH 03055, U.S.A.
Tel: 603-673-8680 • 800-626-2180 • Fax: 603-673-7271

02/06

OW-1 OIL SAND SEPARATOR

KOR-N-SEAL® I & II

Flexible Pipe-to-Manhole Connectors

SPECIFICATION SHEET

PERFORMANCE

Test	ASTM Method	Test Requirements	Kor-N-Seal® I & II
Head Pressure	C923 - 7.1	0° - 13 psi (30 ft) for 10 min. 7° - 10 psi (23 ft) for 10 min.	+13 psi for 10 min. +10 psi for 10 min.
Deflection Test	C923 - 7.2.2	7° in any direction	Over 7° in any direction
Load Test	C923 - 7.2.3	150 lbs/in. pipe dia.	Over 150 lbs/in. pipe dia.

Performed on all standard sizes of Kor-N-Seal Connectors.

RESILIENT EPDM OR POLYISOPRENE RUBBER

Conforms to ASTM C923

Test	ASTM Method	Test Requirements	TEST RESULTS Kor-N-Seal® I & II
Chemical Resistance	D543, at 22°C for 48 h		
1 *N* Sulfuric Acid		No weight loss	No weight loss
1 *N* Hydrochloric Acid		No weight loss	No weight loss
Tensile Strength	D412	1200 psi	1580 psi
Elongation at Break		350% min.	500%
Hardness	D2240 (shore A durometer)	± 5 from the manufacturer's specified hardness	48 ± 5
Accelerated Oven-Aging	D573 70 ± 1°C for 7 days	Decrease of 15%, max. of original tensile strength, decrease of 20% max. of elongation	10.1% tensile decrease 14.0% elongation decrease
Compression Set	D395, method B, at 70°C for 22 h	Decrease of 25%, max. of original deflection	13% decrease
Water Absorption	D471, immerse 0.75 by 2-in. specimen in distilled water at 70°C for 48 h	Increase of 10%, max. of original by weight	.8% increase
Ozone Resistance	D1171	Rating 0	Rating 0
Low-temperature Brittle Point	D746	No fracture at -40°C	No fracture at -40°C
Tear Resistance	D624, method B	200 lbf/in.	No tear at 210 lbf/in.

INTERNAL KORBAND

Conforms to ASTM C923, ASTM A666, and A240

– Korband Assembly is manufactured of 300 series stainless steel.
– Toggle Expander is made of 300 series stainless steel.
– The 106/406 series Wedge Expander is made from reinforced nylon or 300 series stainless steel.
– The 206/306 series Wedge Expander is made from 300 series stainless steel.

EXTERNAL PIPE CLAMP

Conforms to ASTM C923, ASTM A666, and A240

External take-up clamps are manufactured of 300 series stainless steel.

www.npc.com
250 Elm Street • P.O. Box 301
Milford, NH 03055, U.S.A.
Tel: 603-673-8680 • 800-626-2180 • Fax: 603-673-7271